COLUMBIA GORGE
REGIONAL AIRPORT

PO Box 285 • Dallesport • Washington •98617-0285
• Airport Management • 509-767-2272
airporttd@gorge.net

Agenda for the
MEETING OF THE REGIONAL AIRPORT BOARD
OF THE
COLUMBIA GORGE REGIONAL AIRPORT

(Established cooperatively between the City of The Dalles, Oregon and Klickitat County, Washington)

Friday, February 18, 2015 @ 7:00am

Meeting to be Held at the Airport Terminal in Dallesport, WA

I. Call to Order

II. Roll Call

III. Approval of the Agenda

IV. Approval of Minutes: December 18, 2015

V. Public Comments (items not on the Agenda)

VI. Board Member Comments (items not on the Agenda)

VII. Discussion Items
- **A. Airport Projects**
- **B. Department of Ecology and EPA Airport visit.**

VIII. Action Items
- **A. Consideration of Amendment No. 1 to Task Order No. 8 with Precision Approach Engineering for the design of the center portion of Taxiway A. This Amendment will increase the contract to a total of $119,166.00. The FAA has approved this Amendment and local funding is 10% of the Contract amount. Whether to approve Amendment No. 1 of Task Order No. 8 for the design of the center portion of Taxiway A increasing the total Contract to $119,166.00.**

IX. Manager Report - Aeronautical Management, Inc.
- **A. January Budget Report**
- **B. Manager Report**

X. Next Meeting Date: March 18, 2015

XI. Adjournment

Minutes of the Board of Directors
Regional Airport Authority
December 18, 2015
Airport Terminal – Dallesport, Washington

CALL TO ORDER

Chairman Jim Wilcox called the meeting to order at 7:20 a.m.

ROLL CALL

Members present: Tim McGlothlin, Dave Griffith, Terry Trapp and Jim Wilcox. Absent: Debra Turner, Dave Sauter and Norm Deo
Staff members present: Rolf Anderson and Chuck Covert of AMI.

APPROVAL OF AGENDA

The Agenda was approved unanimously.

APPROVAL OF MINUTES

The October 16, 2015, Minutes were unanimously approved.

PUBLIC COMMENTS

Tim Urness discussed the local interest in having drag races this year at the Airport. If it could work the dates would be August 13 and 14, 2016. AMI will discuss this issue with BPA to see if the drag races could be coordinated in a way that they would not interfere with BPA's lease.

BOARD MEMBER COMMENTS

There was a general discussion about new Board Members to replace those members whose terms are expiring.

DISCUSSION ITEMS

Flex Space Building: AMI reported that the Architect is working on the plans and we should have something to present to the Board in January.

ACTION ITEMS

Potential Tenants: Rolf gave an update on the discussions with Everybody's Brewing who continues to be interested in potentially leasing a site in the Airport Business Park. There have been discussions about building the facility for the Tenant with the Tenant providing all of its equipment and any unique improvements that it may need. AMI has requested a meeting with the City to discuss this possibility. Denny Newell has discussed this potential with the Klickitat County Commissioners and is exploring the potential of a CERB grant/loan request. To be on the March CERB Board agenda the application would need to be made by January 19, 2016. After thorough discussion and upon a motion duly made and seconded, the Board unanimously instructed AMI to pursue this potential opportunity and meet with the City and the County to see if some agreement can be reached. AMI will report back to the Board at its next meeting as to the status. Norm Deo requested that if this opportunity proceeds that AMI provide a spreadsheet showing the various costs, lease payments etc.

MANAGER REPORT AMI

AMI presented the November Budget report. All expenses were as expected and the Budget report was unanimously approved as presented.

AMI reported that it has been asked to participate in the consideration by the City of Goldendale to add fuel sales at the Goldendale airport, both 100LL and Jet fuel with a card lock. Rolf attended one meeting and representatives from the City are planning to meet with the Washington State Department of Aviation to discuss funding for this potential project.

Tim McGlothlin asked how the coordination went with the Airport and the fireworks display for the Veterans Day celebration. AMI reported they went well except the NOTAM needs to be issued by AMI instead of the fireworks contractor. The NOTAM the contractor issued was not in the correct place to give pilots adequate notice of the display. If the Contractor will give the information to AMI, AMI will issue the NOTAM in the future.

AMI reported the cattle lease is winding up its first year with these new tenants. As the Tenants remove their cattle a final accounting will be made for the year and plans made for how many cattle will be on the property next year.

AMI presented pictures that it had taken immediately after the very substantial rain that fell on the Airport last month. Despite the very large rainfall there was very limited standing water and no runoff issues.

AMI reported that the Columbia Gorge Community College has decided that it does not have the budgetary resources to pursue an Aviation curriculum in conjunction with Gorge Aviation Services' Pert 141 flight school at this time.

NEXT REGULAR MEETING

January 15, 2015

ADJOURNMENT

Chairman Jim Wilcox adjourned the meeting at 7:57 a.m.

_____

Jim Wilcox, Chairman

Preliminary Submittal
For FAA Review

CONSTRUCTION SAFETY AND PHASING PLAN (CSPP)

TAXIWAY A CENTER REHABILITATION

AIRPORT IMPROVEMENTS PROGRAM

AIP NO. 3-41-0059-0XX

COLUMBIA GORGE REGIONAL AIRPORT

The Dalles, Oregon

Prepared by:

PRECISION APPROACH ENGINEERING, INC.

February 2016

TABLE OF CONTENTS

CONSTRUCTION SAFETY AND PHASING PLAN

(Note – Paragraph numbers refer to Advisory Circular 150/5370-2F)

205. Coordination 1
206. Phasing 1
207. Areas and Operations Affected by Construction Activity 2
208. Navigation Aid (NAVAID) Protection 2
209. Contractor Access 2
210. Wildlife Management 5
211. Foreign Object Debris (FOD) Management 5
212. Hazardous Materials (HAZMAT) Management 5
213. Notification of Construction Activities 6
214. Inspection Requirements 6
215. Underground Utilities 7
216. Penalties 7
217. Special Conditions 7
218. Runway and Taxiway Visual Aids 7
219. Marking and Signs for Access Routes 8
220. Hazard Marking, Lighting and Signing 8
221. Protection of Runway and Taxiway Safety Areas 9
222. Other Limitations on Construction 11

Construction Safety and Phasing Plan Checklist (CSPP)

Construction Progress Daily Safety Checklist (CPDS)

Phonetic Alphabet & Pronunciation

Construction Safety and Phasing Plan Drawings

COLUMBIA GORGE REGIONAL AIRPORT
TAXIWAY A CENTER REHABILITATION

CONSTRUCTION SAFETY AND PHASING PLAN

(Note – Paragraph numbers refer to Advisory Circular 150/5370-2F)

205. Coordination. Airport operational safety during construction will be discussed during the prebid and preconstruction conferences. In addition:

a. Contractor Progress Meetings. Operational safety shall be a standing agenda item for discussion during progress meetings throughout the project.

b. Scope or Schedule Changes. Changes in the scope or duration of the project may necessitate revisions to the Construction Safety and Phasing Plan (CSPP). All changes will be reviewed and approved by the airport operator and the FAA.

c. FAA ATO Coordination. Coordination with FAA ATO is required to schedule airway facility shutdowns and restarts. The project has been coordinated with Daniel Stewart, ADO Project Manager, Seattle ADO, and Seattle FPO Specialist, Seattle Flight Procedures.

d. Impact to NAVAIDS:

No impact to NAVAIDS will occur during this project. Runway MIRL, and Signage circuits will be temporarily turned off during clear daytime hours for transition to new circuits.

206. Phasing. The sequence of construction has been phased to gain maximum efficiency while allowing for the required operations. The construction phases have been coordinated with airport users. The sequenced construction phases have been incorporated into the project design and are reflected in the contract drawings and specifications.

a. Phase Elements. Refer to construction drawings, Construction Safety and Phasing Plan, Sheets 2 and 3:

- Areas closed to aircraft operations
- Duration of closures
- Taxi routes
- ARFF Access routes - N/A
- Construction staging areas
- Construction access and haul routes
- Impacts to NAVAIDs – N/A
- Lighting and marking changes
- Available runway length – N/A
- Declared distances – N/A
- Hazard marking and lighting
- Lead times for required notifications

b. Construction Safety Drawings. Drawings specifically indicating operational safety procedures and methods in affected areas have been developed for each construction phase. See construction drawings.

- Construction Safety and Phasing Plan – Sheet 2 and 3
- Construction Safety and Phasing Plan Notes – Sheet 1

207. Areas and Operations Affected by Construction Activity. The construction phasing plan has been developed to allow runways and taxiways to remain in use to the maximum extent possible without compromising safety. The plan was discussed with airport users during project design.

a. Identification of Affected Areas. Areas and operations affected by the construction are identified in construction drawings, Construction Safety and Phasing Plan, Sheets 2 & 3. The following items are addressed if applicable:

(1) Closing, or partial closing, of runways, taxiways and aprons
(2) Closing of access routes used by airport support vehicles
(3) Interruption of utilities, including water supplies for firefighting
(4) Approach/departure surfaces affected by heights of objects
(5) Construction areas

b. Mitigation of Effects. Specific procedures necessary to maintain the safety and efficiency of airport operations are identified in construction drawings, Construction Safety and Phasing Plan, Sheets 2 & 3. The following items are addressed if applicable:

(1) Temporary changes to runway and/or taxi operations
(2) Maintenance of essential utilities
(3) Temporary changes to air traffic control procedures

208. Navigation Aid (NAVAID) Protection. This project has been coordinated with the FAA ATO/Technical Operations office. There are no planned impacts to NAVAIDS or NAVAID critical areas during this project.

Stockpiling material, as well as movement and parking of equipment is not allowed in the critical area. Appropriate NOTAMs will be filed for construction activities. This project is being coordinated with the Seattle ADO. Submittal of a separate Form 7460-1 is not required for construction activities associated with this project.

209. Contractor Access. The project drawings show the areas to which the contractor has access, and how contractor personnel will access those areas. Specifically addressed are:

a. Location of Stockpiled Construction Materials. Stockpiled materials and equipment storage are not permitted within the RSA, OFZ or OFA of an operational runway. Stockpiled materials and equipment adjacent to these areas shall be prominently marked and lighted during hours of restricted visibility or darkness. This includes determining and verifying that materials are stabilized and stored at an approved location so as not to be a hazard to aircraft operations and to prevent attraction of wildlife and foreign object damage.

b. Vehicle and Pedestrian Operations. Vehicle and pedestrian access routes are shown on the project drawings and are designed to prevent inadvertent or unauthorized entry of persons, vehicles, or animals onto the AOA. These routes have been coordinated with airport tenants. The following is included:

(1) Construction site parking. These areas provide reasonable contractor employee access to the job site. All vehicles not essential for construction, including contractor employee vehicles shall remain outside of air operations area. Parking shall be confined to the Contractor's staging area.

(2) Construction equipment parking. Contractor employees shall park and service all construction vehicles in an area outside the OFZ and never in the safety area of an active runway or taxiway. Inactive equipment shall not be parked on a closed taxiway or runway. Employees shall park construction vehicles outside the OFA when not in use.

(3) Access and haul roads. The construction contractor shall not use any access or haul roads other than those approved. Access routes used by contractor vehicles shall be clearly marked to prevent inadvertent entry to areas open to airport operations.

(4) Marking and lighting of vehicles. Contractor vehicles shall be marked and lighted in accordance with the current AC 150/5210-5, Painting, Marking, and Lighting of Vehicles Used on an Airport. To operate in the AOA during daylight hours, the vehicle must have a flag or amber flashing beacon attached to it. Any vehicle operating in the AOA during hours of darkness or reduced visibility must be equipped with an amber flashing beacon.

(5) Description of proper vehicle operations. On various areas under normal, lost communications, and emergency conditions: Vehicles operating within or crossing the AOA must have prior approval from the airport Owner and shall operate only on approved haul routes. Additional operations requirements are included in the project specifications and drawings. If a vehicle becomes lost or has a radio failure, the operator should vacate the runways and taxiways as quickly and safely as possible and advise the Contractor's safety office or superintendent of the situation and wait for further instruction. If an emergency condition occurs, the contractor's staff should meet at a location designated by the contractor's safety officer.

No private passenger vehicles will be allowed in the air operations area. Workmen shall be transported by the Contractor from the designated staging area to the worksite in company vehicles. Access to the air operations area is restricted to the haul routes established prior to the beginning of contract work. The designated entrance(s) indicated on the drawings will be the Contractor's only authorized point(s) of entry to the project. The Contractor shall install his/her own gate and lock, if necessary, and provide the Owner with a key. The gate(s) shall be locked whenever the Contractor's operations are shut down. Any time the gate is left open for hauling activities, a gate guard shall be provided. Any violations of security are to be reported to the Engineer

(6) Required escorts. Vehicular traffic located in or crossing an AOA must have a working two-way radio or be escorted by a vehicle with a radio. All drivers shall confirm that no aircraft is approaching the vehicle position. When any vehicle, other than one that has prior approval from the airport Owner, must travel within any portions of an AOA, it will be escorted and properly identified and lighted.

(7) Training requirements for vehicle drivers. To ensure compliance with the airport's rules and regulations, the Contractor's Safety Officer will be responsible to ensure contractor's operations are in compliance with the airport operator's vehicle rules and regulations. The Contractor's Safety Officer will be trained on the rules and regulations by Airport Staff prior to beginning the project. The Contractor's Safety Officer shall conduct training sessions to ensure that all personnel who will be preforming radio contact on the Unicom frequency thoroughly understand airport operations. Emphasis shall be placed on the importance of runway and taxiway safety areas and hold lines, notices to airman (NOTAMs), radio operation, and understanding these specifications.

(8) Situational awareness. Vehicle drivers shall confirm by personal observation that no aircraft is approaching their position (either in the air or on the ground) when crossing a runway, taxiway, or any other area open to airport operations. No vehicles are allowed within 25 feet of a parked aircraft or within 40 feet of a moving aircraft. No vehicles shall be driven between parked aircraft and passenger loading areas, and no vehicle shall pass in front of pedestrians or moving aircraft. In addition, it is the responsibility of the escort vehicle driver to verify the movement/position of all escorted vehicles at any given time.

(9) Two-way radio communication procedures.

(a) General. Construction contractor personnel engaged in activities involving unescorted operation on aircraft movement areas must observe the proper procedures for communications, including using the appropriate radio frequency. When operating vehicles on or near open runways or taxiways, construction personnel must announce their intentions and continue to monitor aircraft operations.

The contractor shall provide a minimum of 2 radios capable of communication on the assigned frequency and designate an individual to monitor aircraft operations during all construction activities. The individual operating the radio shall be trained in aviation radio communications.

Vehicular traffic located in or crossing an AOA must have a working two-way radio, be under the direction of contractor furnished flaggers. All drivers shall confirm that no aircraft is approaching the vehicle position. Contractor shall monitor the Common Traffic Advisory Frequency (CTAF) while working in closed areas.

(b) Areas requiring two-way radio communication with the Aircraft and FBO.

- Anywhere on Airport property

(c) Frequencies to be used.

- The contractor shall use and monitor Frequency 123.0

(d) Proper radio usage, including read back requirements.

- Per established procedures at Columbia Gorge Regional/The Dalles Municipal Airport.

(e) Radio Operators.

- Radio operators shall use proper phraseology, including the International Phonetic Alphabet, attached to this document.

(f) Light gun signals. N/A

(10) Maintenance of the secured area of the airport, including:

(a) Fencing and gates. Contractors shall take care to maintain security during construction when access points are created in the security fencing to permit the passage of construction vehicles or personnel. Temporary gates shall be equipped so they can be securely closed and locked to prevent access by animals and unauthorized people. Procedures shall be in place to ensure that only authorized persons and vehicles have access to the AOA and to prohibit "piggybacking" behind another person or vehicle.

(b) Badging requirements. No badging required.

(c) Airports subject to 49 CFR Part 1542, Airport Security. N/A

(11) Flagging. It is anticipated that construction traffic will be required to cross active taxiways and aprons. During operations, the contractor shall furnish flaggers for control of construction traffic. Flaggers are to be trained by Airport Operations Personnel on airport procedures prior to assuming their control duties. Vehicle traffic will be permitted to cross active taxiways only when flaggers are in the appropriate position. Flaggers at critical locations and as directed by Airport Operations Personnel will be required to maintain and monitor radio communications with the local air traffic. Under no circumstances is the Contractor to cross a runway open to air traffic.

210. Wildlife Management. The airport does not have a Wildlife Hazard Management Plan. The Contractor shall carefully control and continuously remove waste or loose materials that might attract wildlife. Contractor personnel shall be aware of and avoid construction activities that can create wildlife hazards on airports, such as:

a. Trash. Food scraps must be collected from construction personnel activity.

b. Standing Water.

c. Tall Grass and Seeds.

d. Poorly Maintained Fencing and Gates. See 209.b(10)(a) above.

e. Disruption of Existing Wildlife Habitat. Contractor personnel shall immediately notify the airport operator of wildlife sightings.

211. Foreign Object Debris (FOD) Management. The **C**ontractor shall not leave or place FOD on or near active aircraft movement areas. Materials tracked onto these areas must be removed immediately. Materials capable of creating FOD shall be continuously removed during the construction project. Fencing may be necessary to contain material that can be carried by wind into areas where aircraft operate.

212. Hazardous Materials (HAZMAT) Management. The contractors shall be prepared to expeditiously contain and clean-up spills resulting from fuel or hydraulic fluid leaks

213. Notification of Construction Activities. The contractor shall immediately notify the airport operator or Engineer of any conditions adversely affecting the operational safety of the airport.

a. **List of Responsible Representatives/Points of Contact.** The contractor shall prepare and maintain an emergency contact list for all involved parties, and procedures for contacting each party, including after hours.

b. **NOTAMs.** Before beginning any construction activity which may impact the normal operations at the airport the contractor must ensure that the activity has been reported using the FAA's Notice to Airmen (NOTAM) system. Upon completion of work and return of areas to standard conditions, the contractor must verify the cancellation of all applicable NOTAMs. Only the airport operator may initiate or cancel NOTAMs. The airport operator is also the only entity that can close or open a runway.

c. **Emergency notification procedures for medical, firefighting, and police response:** In the case of emergency, the first and immediate action will be for the Contractor to call 911. After reporting the emergency to 911, then will immediately notify airport staff and the Engineer.

   Procedures for notifying ARFF personnel, mutual aid providers, and other emergency services when construction requires shutting off or otherwise disrupting any water line or fire hydrant on the airport or adjoining areas and when the contractor is working with hazardous material on the airfield will be provided to the Contractor at the Preconstruction Conference.

d. **Coordination with ARFF**. N/A

e. **Notification to the FAA.**

   All communication with the FAA will be accomplished by the airport operator.

   When construction operations require a shutdown of an airport owned NAVAID from service for more than 24 hours or in excess of 4 hours daily on consecutive days, a minimum 45 day notice prior to facility shutdown is required. Unanticipated utility outages and cable cuts that could impact FAA NAVAIDs must be reported to the Owner or engineer immediately.

   Construction activity may not commence prior to the issuance of a NOTAM. The contractor shall advise the Engineer 72 hours in advance of the planned commencement of construction activity so that a NOTAM can be issued and shall not commence such activity until advised by the Engineer. Upon completion of the work to the satisfaction of the Engineer, a NOTAM indicating completion will be issued. No further work in affected areas will be permitted.

214. Inspection Requirements.

a. **Daily Inspections.** Inspections will be conducted daily, or more frequently if necessary to ensure conformance with this CSPP. A Construction Progress Daily Safety (CPDS) checklist, enclosed as part of this document, will be used.

b. **Final Inspection**. A final inspection with the participation of the Owner, Engineer, and Contractor will be performed.

215. Underground Utilities. Known utilities and structures expected to be adjacent to or encountered in the work are shown on the Drawings. There may be some discrepancies and omissions in the locations and quantities of utilities and structures shown. Those shown are for the convenience of the Contractor only, and no responsibility is assumed by either the airport or the Engineer for their accuracy or completeness.

Coordination among the FAA, airport management, utility companies, resident engineer, and contractors will be accomplished at the preconstruction conference. NAVAIDs, Weather Service facilities, electric cables, and other utilities must be fully protected during the entire construction time.

216. Penalties. Contractors are subject to suspension of work for noncompliance. Contractor Personnel who violate safety requirements may be removed from the project at the discretion of the Owner.

217. Special Conditions. None

218. Runway and Taxiway Visual Aids. The contractor shall insure that areas where aircraft will be operating are clearly and visibly separated from construction areas, including closed runways. Throughout the duration of the construction project, the contractor shall verify that these areas remain clearly marked and visible at all times and that marking, lighting, signs, and visual NAVAIDs remain in place and operational.

a. **General.** Airport markings, lighting, signs, and visual NAVAIDs shall be clearly visible to pilots, and not misleading, confusing, or deceptive. All must be secured in place to prevent movement by prop wash, jet blast, wing vortices, or other wind currents and constructed of materials that would minimize damage to an aircraft in the event of inadvertent contact.

b. **Markings.** Markings shall be in compliance with the current standards of AC 150/5340-1, Standards for Airport Markings.

   (1) **Closed Runways and Taxiways.** The project drawings show the required lighting and marking for runway and taxiway closure.

c. **Signs.** Signs will be in conformance with the current AC 150/5345-44, Specification for Runway and Taxiway Signs and the current AC 150/5340-18, Standard for Airport Sign Systems. The project drawings show the required signs for runway and taxiway closure.

d. **Lighting and Visual NAVAIDs.** Lighting must be in conformance with AC 150/5340-30, Design and Installation Details for Airport Visual Aids, and AC 150/5345-50, Specification for Portable Runway and Taxiway Lights. When disconnecting runway and taxiway lighting fixtures, the Contractor shall disconnect the associated isolation transformer. Alternately, the Contractor may cover the light fixture in such a way as to prevent light leakage. Avoid removing the lamp from energized fixtures because an excessive number of isolation transformers with open secondaries may damage the regulators and/or increase the current above its normal value. Secure, identify, and place any above ground temporary wiring in conduit to prevent electrocution and fire ignition sources. Precision Approach Path Indicators (PAPIs), Visual Approach Slope Indicators (VASIs), Runway End Identifier Lights (REILs) and lighting may be altered, screened, or deactivated during the project. It is the contractor's responsibility to perform the work and coordinate all such changes with the Owner or Resident Engineer to ensure proper NOTAMs are issued. At the end of each day the contractor shall perform a check of temporary electrical facilities. A log of the daily checks shall be maintained onsite.

(1) Permanently Closed Runways and Taxiways.

(2) Temporarily Closed Runways. Fabric Closure Crosses will be used both at night and during the day, placed over the Runway numerals at each end of the runway. During nighttime runway and taxiway closures all runway, taxiway and NAVAIDs will be disconnected. The use of a lighted X is required if night work requires runway lighting to be on. See the current AC 150/5345-55, Specification for L-893, Lighted Visual Aid to Indicate Temporary Runway Closure. For runways that have been temporarily closed, but for an extended period, and for those with pilot controlled lighting, disconnect the lighting circuits or secure switches to prevent inadvertent activation. For runways that will be opened periodically, coordinate procedures with the FAA air traffic manager or, at airports without an ATCT, the airport operator.

(3) Partially Closed Runways and Displaced Thresholds. N/A

(4) Temporarily Closed Taxiways. Deactivate the taxiway lighting circuits. When deactivation is not possible (for example other taxiways on the same circuit are to remain open), cover the light fixture in such a way as to prevent light leakage. Contractor shall submit method to airport operator and engineer for approval prior to construction.

219. Marking and Signs for Access Routes. Pavement markings and signs will conform to the current AC 150/5340-18 requirements and with the Federal Highway Administration Manual on Uniform Traffic Control Devices (MUTCD) or State highway specifications. Signs adjacent to areas used by aircraft will comply with the current frangibility requirements of AC 150/5220-23, Frangible Connections.

220. Hazard Marking, Lighting and Signing.

a. Hazard Marking and Lighting. Hazardous areas in the AOA, including any area affected by construction that is normally accessible to aircraft, personnel, or vehicles, open manholes, areas under repair, stockpiled material, waste areas, and areas subject to jet blast, shall be marked with barricades. During periods of low visibility and at night, red flashing lights shall be operational on the barricades. The hazardous area marking and lighting shall be furnished and maintained by the contractor.

b. Equipment.

(1) Barricades. Barricades, including traffic cones, (weighted or sturdily attached to the surface) are acceptable methods to identify and define the limits of construction and hazardous areas. Careful consideration must be given to selecting equipment that poses the least danger to aircraft but is sturdy enough to remain in place when subjected to typical winds, prop wash and jet blast. The spacing of barricades shall be such that a breach is physically prevented barring a deliberate act.

(2) Lights. Lights shall be red, either steady burning or flashing, and must meet the luminance requirements of the State Highway Department. Lights shall be mounted on barricades and spaced at no more than 10 ft. Lights shall be operated between sunset and sunrise and during periods of low visibility whenever the airport is open for operations.

(3) Signs. The contractor shall supplement barricades with signs (for example "No Entry," "No Vehicles") as necessary.

(4) Air Operations Area - General. Barricades are not permitted in any active safety area. Within a runway or taxiway object free area, and on aprons, the contractor shall use orange traffic cones, flashing or steady burning red lights as noted above, collapsible barricades marked with diagonal, alternating orange and white stripes; and/or signs to separate all construction/maintenance areas from the movement area. Barricades may be supplemented with alternating orange and white flags at least 20 by 20 in (50 by 50 cm) square and securely fastened to eliminate FOD. All barricades adjacent to any open runway or taxiway safety area, or apron must be as low as possible to the ground, and no more than 18 in high, exclusive of supplementary lights and flags. Barricades shall be of low mass; easily collapsible upon contact with an aircraft or any of its components; and weighted or sturdily attached to the surface to prevent displacement from prop wash, jet blast, wing vortex, or other surface wind currents. If affixed to the surface, they shall be frangible within 3 inches of the ground.

(5) Air Operations Area - Runway/Taxiway Intersections. The contractor shall use highly reflective barricades with lights to close taxiways leading to closed runways.

(6) Air Operations Area - Other. Beyond runway and taxiway object free areas and aprons, the contractor may use various materials, including railroad ties, sawhorses, jersey barriers, or barrels as barricades intended for construction vehicles and personnel.

(7) Maintenance. The construction specifications include a provision requiring the contractor to have a person on call 24 hours a day for emergency maintenance of airport hazard lighting and barricades. The contractor shall file the contact person's information with the airport operator. Lighting shall be checked for proper operation at least once per day, preferably at dusk.

221. Protection of Runway and Taxiway Safety Areas. Runway and taxiway safety areas, obstacle free zones (OFZ), object free areas (OFA), and approach surfaces shall be protected at all times by the contractor. This project is being coordinated with the Seattle ADO. Submittal of a separate Form 7460-1 is not required. The project drawings show all safety areas, object free areas, obstacle free zones and approach departure surfaces affected by construction.

a. Runway Safety Area (RSA). A runway safety area is the defined surface surrounding the runway prepared or suitable for reducing the risk of damage to airplanes in the event of an undershoot, overshoot, or excursion from the runway. Construction activities within the existing RSA are subject to the following conditions:

(1) No construction may occur within the RSA while the runway is open for aircraft operations.

(2) Excavations

(a) Soil erosion must be controlled to maintain RSA standards, that is, the RSA must be cleared and graded and have no potentially hazardous ruts, humps, depressions, or other surface variations, and be capable, under dry conditions, of supporting snow removal equipment, aircraft rescue and firefighting equipment, and the occasional passage of aircraft without causing structural damage to the aircraft.

Open trenches or excavations are not permitted within the RSA while the runway is open. If the runway must be opened before excavations are backfilled, the contractor shall cover the excavations appropriately. Covering for open excavations shall be designed to allow the safe operation of the heaviest aircraft operating on the runway without damage to the aircraft.

(b) The contractor shall prominently mark open trenches and excavations at the construction site with red or orange flags, as approved by the airport operator, and light them with red lights during hours of restricted visibility or darkness.

(3) Erosion Control.

(a) Soil erosion must be controlled to maintain RSA standards, that is, the RSA must be cleared and graded and have no potentially hazardous ruts, humps, depressions, or other surface variations, and be capable, under dry conditions, of supporting snow removal equipment, aircraft rescue and firefighting equipment, and the occasional passage of aircraft without causing structural damage to the aircraft.

(b) It is anticipated that wind erosion (dust and sand) could have safety impacts to airport operation areas (AOAs) if not adequately managed properly during construction. The contractor shall use approved methods to prevent dust and sand from blowing into AOAs during construction. Approved wind erosion measures shall be implemented during the entire construction period and the contractor shall be prepared to implement measures 24 hours per day, 7 days per week, as required to manage wind erosion. At a minimum, but not limited to, the contractor shall monitor the airport's All Weather Observation System (AWOS) on VHF frequency 135.175 or by phone number (509) 767-1729 and at any time winds exceed 15 knots the contractor shall water all areas disturbed by construction activities that have exposed soils. Contractor shall water disturbed areas such that soils remain moist at all times.

In addition, any dust and/or sand that blow's onto AOA surfaces and creates a safety hazard shall be swept, vacuumed, and/or washed to the satisfaction of the Engineer immediately to prevent safety impacts to AOAs.

b. Runway Object Free Area (ROFA). Construction, including excavations, may be permitted in the ROFA. However, equipment must be removed from the ROFA when not in use, and material shall not be stockpiled in the ROFA.

c. Taxiway Safety Area (TSA). A taxiway safety area is a defined surface alongside the taxiway prepared or suitable for reducing the risk of damage to an airplane unintentionally departing the taxiway. Construction activities within the TSA are subject to the following conditions:

(1) No construction may occur within the TSA while the taxiway is open for aircraft operations.

(2) Excavations.

(a) Open trenches or excavations are not permitted within the TSA while the taxiway is open. If the taxiway must be opened before excavations are backfilled, the contractor shall cover the excavations appropriately. Covering for open trenches must be designed to allow the safe operation of the heaviest aircraft operating on the taxiway without damage to the aircraft.

(b) The contractor shall prominently mark open trenches and excavations at the construction site with red or orange flags, as approved by the airport operator, and light them with red lights during hours of restricted visibility or darkness.

(3) Erosion Control.

(a) Soil erosion must be controlled to maintain TSA standards, that is, the TSA must be cleared and graded and have no potentially hazardous ruts, humps, depressions, or other surface variations, and be capable, under dry conditions, of supporting snow removal equipment, aircraft rescue and firefighting equipment, and the occasional passage of aircraft without causing structural damage to the aircraft.

(b) It is anticipated that wind erosion (dust and sand) could have safety impacts to airport operation areas (AOAs) if not adequately managed properly during construction. The contractor shall use approved methods to prevent dust and sand from blowing into AOAs during construction. Approved wind erosion measures shall be implemented during the entire construction period and the contractor shall be prepared to implement measures 24 hours per day, 7 days per week, as required to manage wind erosion as outlined in paragraph 221.a.3.b.

In addition, any dust and sand that does blow onto AOA surfaces shall be swept, vacuumed, and/or washed immediately to prevent safety impacts to AOAs.

d. Taxiway Object Free Area (TOFA). Unlike the Runway Object Free Area, aircraft wings regularly penetrate the taxiway object free area during normal operations. Thus the restrictions are more stringent. No construction may occur within the taxiway object free area while the taxiway is open for aircraft operations.

e. Obstacle Free Zone (OFZ). Personnel, material, or equipment may not penetrate the OFZ while the runway is open for aircraft operations.

f. Runway Approach/Departure Areas. Personnel, materials, and equipment shall remain clear of the applicable approach and departure surfaces.

(1) Construction activity in a runway approach/departure area. N/A

(2) Caution regarding partial runway closures. – No Runway closures are anticipated in association with this project.

(3) Caution regarding displaced thresholds. - N/A

222. Other Limitations on Construction:

a. Prohibitions.

(1) The use of tall equipment is prohibited unless a Form 7460-1 determination letter has been issued by FAA.

(2) Open flame welding or torches are not permitted unless fire safety precautions are provided and the airport operator has approved their use.

(3) The use of electrical blasting caps on or within 1,000 feet of the airport property is prohibited.

(4) The use of flare pots within the AOA is prohibited.

b. Restrictions.

(1) Construction suspension required during specific airport operations. The airport owner shall have the authority to suspend the work wholly, or in part, for such period as necessary, due to conditions considered unfavorable for the execution of the work, or due to the failure of the Contractor to carry out orders given or perform provisions of the contract.

(2) Areas that cannot be worked on simultaneously. The contractor shall refer to the Contract Drawings for a description of areas that cannot be worked on simultaneously.

(3) Day or night construction restrictions. Any vehicle operating in the AOA during hours of darkness or reduced visibility must be equipped with an amber flashing beacon. When used during periods of darkness, all barricades, warning signs, and hazard markings shall be suitably illuminated.

(4) Seasonal construction restrictions. See the seeding specification, T-901, in the Contract Documents.

Appendix 4. Construction Project Daily Safety Inspection Checklist

The situations identified below are potentially hazardous conditions that may occur during airport construction projects. Safety area encroachments, unauthorized and improper ground vehicle operations, and unmarked or uncovered holes and trenches near aircraft operating surfaces pose the most prevalent threats to airport operational safety during airport construction projects. The list below is one tool that the airport operator or contractor may use to aid in identifying and correcting potentially hazardous conditions. It should be customized as appropriate for each project.

Potentially Hazardous Conditions

Item	Action Required	or	None
Excavation adjacent to runways, taxiways, and aprons improperly backfilled.			☐
Mounds of earth, construction materials, temporary structures, and other obstacles near any open runway, taxiway, or taxi lane; in the related Object Free area and aircraft approach or departure areas/zones; or obstructing any sign or marking.			☐
Runway resurfacing projects resulting in lips exceeding 3 in (7.6 cm) from pavement edges and ends.			☐
Heavy equipment (stationary or mobile) operating or idle near AOA, in runway approaches and departures areas, or in OFZ.			☐
Equipment or material near NAVAIDs that may degrade or impair radiated signals and/or the monitoring of navigation and visual aids. Unauthorized or improper vehicle operations in localizer or glide slope critical areas, resulting in electronic interference and/or facility shutdown.			☐
Tall and especially relatively low visibility units (that is, equipment with slim profiles) — cranes, drills, and similar objects — located in critical areas, such as OFZ and approach zones.			☐
Improperly positioned or malfunctioning lights or unlighted airport hazards, such as holes or excavations, on any apron, open taxiway, or open taxi lane or in a related safety, approach, or departure area.			☐
Obstacles, loose pavement, trash, and other debris on or near AOA. Construction debris (gravel, sand, mud, paving materials) on airport pavements may result in aircraft propeller, turbine engine, or tire damage. Also, loose materials may blow about, potentially causing personal injury or equipment damage.			☐

Item	Action Required	or	None
Inappropriate or poorly maintained fencing during construction intended to deter human and animal intrusions into the AOA. Fencing and other markings that are inadequate to separate construction areas from open AOA create aviation hazards.			☐
Improper or inadequate marking or lighting of runways (especially thresholds that have been displaced or runways that have been closed) and taxiways that could cause pilot confusion and provide a potential for a runway incursion. Inadequate or improper methods of marking, barricading, and lighting of temporarily closed portions of AOA create aviation hazards.			☐
Wildlife attractants — such as trash (food scraps not collected from construction personnel activity), grass seeds, tall grass, or standing water — on or near airports.			☐
Obliterated or faded temporary markings on active operational areas.			☐
Misleading or malfunctioning obstruction lights. Unlighted or unmarked obstructions in the approach to any open runway pose aviation hazards.			☐
Failure to issue, update, or cancel NOTAMs about airport or runway closures or other construction related airport conditions.			☐
Failure to mark and identify utilities or power cables. Damage to utilities and power cables during construction activity can result in the loss of runway / taxiway lighting; loss of navigation, visual, or approach aids; disruption of weather reporting services; and/or loss of communications.			☐
Restrictions on ARFF access from fire stations to the runway / taxiway system or airport buildings.			☐
Lack of radio communications with construction vehicles in airport movement areas.			☐
Objects, regardless of whether they are marked or flagged, or activities anywhere on or near an airport that could be distracting, confusing, or alarming to pilots during aircraft operations.			☐
Water, snow, dirt, debris, or other contaminants that temporarily obscure or derogate the visibility of runway/taxiway marking, lighting, and pavement edges. Any condition or factor that obscures or diminishes the visibility of areas under construction.			☐
Spillage from vehicles (gasoline, diesel fuel, oil) on active pavement areas, such as runways, taxiways, aprons, and airport roadways.			☐

Item	Action Required	or	None
Failure to maintain drainage system integrity during construction (for example, no temporary drainage provided when working on a drainage system).			☐
Failure to provide for proper electrical lockout and tagging procedures. At larger airports with multiple maintenance shifts/workers, construction contractors should make provisions for coordinating work on circuits.			☐
Failure to control dust. Consider limiting the amount of area from which the contractor is allowed to strip turf.			☐
Exposed wiring that creates an electrocution or fire ignition hazard. Identify and secure wiring, and place it in conduit or bury it.			☐
Site burning, which can cause possible obscuration.			☐
Construction work taking place outside of designated work areas and out of phase.			☐

Phonetic Alphabet and Pronunciation

Letter	Word	Pronunciation
A	Alfa (ICAO, ITU, FAA) Alpha (ANSI)	**AL** FAH
B	Bravo	**BRAH** VOH
C	Charlie	**CHAR** LEE or **SHAR** LEE (ICAO, ITU)
D	Delta	**DELL** TAH
E	Echo	**ECK** OH
F	Foxtrot	**FOKS** TROT
G	Golf	GOLF
H	Hotel	HO **TELL** (ICAO) HOH **TELL** (ITU, FAA)
I	India	**IN** DEE AH
J	Juliett (ICAO, ITU, FAA) Juliet (ANSI)	**JEW** LEE **ETT**
K	Kilo	**KEY** LOH
L	Lima	**LEE** MAH
M	Mike	MIKE
N	November	NO **VEM** BER
O	Oscar	**OSS** CAH
P	Papa	PAH **PAH**
Q	Quebec	KEH **BECK**
R	Romeo	**ROW** ME OH
S	Sierra	SEE **AIR** RAH (ICAO, ITU) SEE **AIR** AH (FAA)
T	Tango	**TANG** GO
U	Uniform	**YOU** NEE FORM or **OO** NEE FORM (ICAO, ITU)
V	Victor	**VIK** TAH
W	Whiskey	**WISS** KEY
X	X-ray	**ECKS RAY** (ICAO, ITU) **ECKS** RAY (FAA)
Y	Yankee	**YANG** KEY
Z	Zulu	**ZOO** LOO
0	Zero (ICAO, FAA) Nadazero (ITU)	ZE RO (ICAO, FAA) NAH-DAH-ZAY-ROH (ITU)
1	One (ICAO, FAA) Unaone (ITU)	WUN (ICAO, FAA) OO-NAH-WUN (ITU)
2	Two (ICAO, FAA) Bissotwo (ITU)	TOO (ICAO, FAA) BEES-SOH-TOO (ITU)
3	Three (ICAO, FAA) Terrathree (ITU)	TREE (ICAO, FAA) TAY-RAH-TREE (ITU)
4	Four (ICAO, FAA) Kartefour (ITU)	**FOW** ER (ICAO, FAA) KAR-TAY-FOWER (ITU)
5	Five (ICAO, FAA) Pantafive (ITU)	FIFE (ICAO, FAA) PAN-TAH-FIVE (ITU)
6	Six (ICAO, FAA) Soxisix (ITU)	SIX (ICAO, FAA) SOK-SEE-SIX (ITU)
7	Seven (ICAO, FAA) Setteseven (ITU)	**SEV** EN (ICAO, FAA) SAY-TAY-SEVEN (ITU)
8	Eight (ICAO, FAA) Oktoeight (ITU)	AIT (ICAO, FAA) OK-TOH-AIT (ITU)
9	Nine (ICAO, FAA) Novenine (ITU)	**NIN** ER (ICAO, FAA) NO-VAY-NINER (ITU)

SAFETY AND PHASING NOTES:

NOTE:
THE FOLLOWING REPRESENTS ONLY A PORTION OF THE CONSTRUCTION SAFETY AND PHASING PLAN (CSPP). REFER TO THE CONTRACT DOCUMENTS AND CURRENT FAA ADVISORY CIRCULAR 150/5370-2F FOR ADDITIONAL REQUIREMENTS.

AT ALL TIMES DURING CONSTRUCTION, THE CONTRACTOR SHALL CONDUCT ACTIVITIES IN CONFORMANCE WITH ALL SAFETY STANDARDS CONTAINED IN ADVISORY CIRCULAR 150/5370-2F, OPERATIONAL SAFETY ON AIRPORTS DURING CONSTRUCTION. IN ADDITION, THE FOLLOWING SAFETY AND OPERATIONAL PRACTICES SHALL BE OBSERVED:

205. COORDINATION. OPERATIONAL SAFETY SHALL BE A STANDING AGENDA ITEM DURING PROGRESS MEETINGS THROUGHOUT THE PROJECT.

206. PHASING. DRAWINGS SPECIFICALLY INDICATING OPERATIONAL SAFETY PROCEDURES AND METHODS IN AFFECTED AREAS HAVE BEEN DEVELOPED FOR EACH CONSTRUCTION PHASE. REFER TO THIS CONSTRUCTION SAFETY AND PHASING PLAN AND THE CONTRACT DRAWINGS.

207. AREAS AND OPERATIONS AFFECTED BY CONSTRUCTION ACTIVITY. THE CONSTRUCTION PHASING PLANS HAVE BEEN DEVELOPED TO ALLOW RUNWAYS AND TAXIWAYS TO REMAIN IN USE TO THE MAXIMUM EXTENT POSSIBLE WITHOUT COMPROMISING SAFETY. THE FOLLOWING ITEMS ARE ADDRESSED: CLOSING OF TAXIWAYS AND APRONS; CLOSING OF ROUTES USED BY AIRPORT VEHICLES; AND APPROACH/DEPARTURE SURFACES AFFECTED BY HEIGHTS OF OBJECTS.

208. NAVIGATION AID (NAVAID) PROTECTION. CONSTRUCTION ACTIVITY WITHIN THE CRITICAL AREAS OF NAVIGATION AIDS REQUIRES COORDINATION WITH FACILITY OWNER. THE CONTRACTOR SHALL GIVE THE AIRPORT OPERATOR OR ENGINEER ADVANCE NOTICE OF THIS ACTIVITY TO ALLOW COORDINATION WITH APPROPRIATE REPRESENTATIVES. STOCKPILING MATERIAL OR MOVEMENT/PARKING OF EQUIPMENT IS NOT ALLOWED IN CRITICAL AREAS. APPROPRIATE NOTAMS MUST BE FILED FOR CONSTRUCTION ACTIVITIES.

209. CONTRACTOR ACCESS. THE PROJECT DRAWINGS SHOW THE AREAS TO WHICH THE CONTRACTOR HAS ACCESS, AND HOW CONTRACTOR PERSONNEL WILL ACCESS THOSE AREAS. ACCESS ROUTES ARE DESIGNED TO PREVENT INADVERTENT OR UNAUTHORIZED ENTRY ONTO THE AIRPORT OPERATING AREA (AOA). CONTRACTOR EMPLOYEES SHALL PARK AND SERVICE ALL CONSTRUCTION VEHICLES IN AN AREA OUTSIDE THE OFA AND NEVER IN THE SAFETY AREA OF AN ACTIVE RUNWAY OR TAXIWAY. INACTIVE EQUIPMENT SHALL NOT BE PARKED ON A CLOSED TAXIWAY. THE CONTRACTOR SHALL NOT USE ANY ACCESS OR HAUL ROADS OTHER THAN THOSE APPROVED. ACCESS ROUTES USED BY CONTRACTOR VEHICLES SHALL BE CLEARLY MARKED TO PREVENT INADVERTENT ENTRY TO AREAS OPEN TO AIRPORT OPERATIONS. WHEN ANY VEHICLE, OTHER THAN ONE THAT HAS PRIOR APPROVAL FROM THE AIRPORT OWNER, MUST TRAVEL WITHIN ANY PORTIONS OF AN AOA, IT WILL BE ESCORTED AND PROPERLY IDENTIFIED AND LIGHTED. VEHICULAR TRAFFIC LOCATED IN OR CROSSING AN AOA MUST HAVE A WORKING TWO-WAY RADIO OR BE ESCORTED BY A VEHICLE WITH A RADIO. ALL DRIVERS SHALL CONFIRM THAT NO AIRCRAFT IS APPROACHING THE VEHICLE POSITION. CONSTRUCTION PERSONNEL MAY OPERATE IN AN AOA WITHOUT TWO-WAY RADIO COMMUNICATION PROVIDED A NOTAM IS ISSUED CLOSING THE AREA AND THE AREA IS PROPERLY MARKED AND BARRICADED TO PREVENT INCURSIONS. CONTRACTOR SHALL MONITOR THE ATCT/CTAF FREQUENCY WHILE WORKING IN CLOSED AREAS. DRIVERS SHALL CONFIRM BY PERSONAL OBSERVATION THAT NO AIRCRAFT IS APPROACHING THEIR POSITION WHEN CROSSING A TAXIWAY OR OTHER AREA OPEN TO AIRPORT OPERATIONS. IN ADDITION, IT IS THE RESPONSIBILITY OF THE ESCORT VEHICLE DRIVER TO VERIFY THE MOVEMENT/POSITION OF ALL ESCORTED VEHICLES AT ANY GIVEN TIME. CONSTRUCTION CONTRACTOR PERSONNEL ENGAGED IN ACTIVITIES INVOLVING UNESCORTED OPERATION ON AIRCRAFT MOVEMENT AREAS MUST OBSERVE THE PROPER PROCEDURES FOR COMMUNICATIONS, INCLUDING USING THE APPROPRIATE RADIO FREQUENCY. WHEN OPERATING VEHICLES ON OR NEAR OPEN TAXIWAYS, CONSTRUCTION PERSONNEL MUST ANNOUNCE THEIR INTENTIONS AND CONTINUE TO MONITOR AIRCRAFT OPERATIONS. PROCEDURES SHALL BE IN PLACE TO ENSURE THAT ONLY AUTHORIZED PERSONS AND VEHICLES HAVE ACCESS TO THE AOA AND TO PROHIBIT "PIGGYBACKING" BEHIND ANOTHER PERSON OR VEHICLE.

210. WILDLIFE MANAGEMENT. THE CONTRACTOR SHALL CAREFULLY CONTROL AND CONTINUOUSLY REMOVE WASTE OR LOOSE MATERIALS THAT MIGHT ATTRACT WILDLIFE. CONTRACTOR PERSONNEL SHALL IMMEDIATELY NOTIFY THE AIRPORT OPERATOR OF WILDLIFE SIGHTINGS.

211. FOREIGN OBJECT DEBRIS (FOD) MANAGEMENT. THE CONTRACTOR SHALL NOT LEAVE OR PLACE FOD ON OR NEAR ACTIVE AIRCRAFT MOVEMENT AREAS. MATERIALS TRACKED ONTO THESE AREAS MUST BE REMOVED IMMEDIATELY. MATERIALS CAPABLE OF CREATING FOD SHALL BE CONTINUOUSLY REMOVED DURING THE CONSTRUCTION PROJECT.

212. HAZARDOUS MATERIALS (HAZMAT) MANAGEMENT. THE CONTRACTORS SHALL BE PREPARED TO EXPEDITIOUSLY CONTAIN AND CLEAN-UP SPILLS RESULTING FROM FUEL OR HYDRAULIC FLUID LEAKS.

213. NOTIFICATION OF CONSTRUCTION ACTIVITIES. THE CONTRACTOR SHALL IMMEDIATELY NOTIFY THE OWNER OR ENGINEER OF ANY CONDITIONS ADVERSELY AFFECTING THE OPERATIONAL SAFETY OF THE AIRPORT. BEFORE BEGINNING ANY CONSTRUCTION ACTIVITY WHICH MAY IMPACT THE NORMAL OPERATIONS AT THE AIRPORT THE CONTRACTOR MUST ENSURE THAT THE ACTIVITY HAS BEEN REPORTED USING THE FAA'S NOTICE TO AIRMEN (NOTAM) SYSTEM. UPON COMPLETION OF WORK AND RETURN OF AREAS TO STANDARD CONDITIONS, THE CONTRACTOR MUST VERIFY THE CANCELLATION OF ALL APPLICABLE NOTAMS. ONLY THE AIRPORT OPERATOR MAY INITIATE OR CANCEL NOTAMS, AND IS THE ONLY ENTITY THAT CAN CLOSE OR OPEN A RUNWAY. ALL COMMUNICATION WITH THE FAA WILL BE ACCOMPLISHED BY THE OWNER.

214. INSPECTION REQUIREMENTS. INSPECTIONS WILL BE CONDUCTED DAILY, OR MORE FREQUENTLY IF NECESSARY, TO ENSURE CONFORMANCE WITH THIS CSPP. A CONSTRUCTION PROGRESS DAILY SAFETY (CPDS) CHECKLIST SHALL BE USED. SEE SPECIFICATIONS.

215. UNDERGROUND UTILITIES. THE CONTRACTOR SHALL BE RESPONSIBLE FOR CALLING THE UTILITY NOTIFICATION CENTER TO LOCATE PUBLIC UTILITIES AND FOR ANY ADDITIONAL UTILITY LOCATES INCLUDING HIRING A PRIVATE UTILITY LOCATE SERVICE IF REQUIRED.

216. PENALTIES. CONTRACTOR PERSONNEL WHO VIOLATE SAFETY REQUIREMENTS MAY BE REMOVED FROM THE PROJECT AT THE DISCRETION OF THE OWNER.

218. TAXIWAY VISUAL AIDS. THE CONTRACTOR SHALL ENSURE THAT AREAS WHERE AIRCRAFT WILL BE OPERATING ARE CLEARLY AND VISIBLY SEPARATED FROM CONSTRUCTION AREAS.

220. HAZARD MARKING, LIGHTING AND SIGNING. HAZARDOUS AREAS IN THE AOA, (INCLUDING CONSTRUCTION AREAS NORMALLY ACCESSIBLE TO AIRCRAFT), OPEN MANHOLES, AREAS UNDER REPAIR, STOCKPILED MATERIAL, WASTE AREAS, AND AREAS SUBJECT TO JET BLAST, SHALL BE MARKED WITH BARRICADES. DURING PERIODS OF LOW VISIBILITY AND AT NIGHT, RED FLASHING LIGHTS SHALL BE OPERATIONAL ON THE BARRICADES. THE HAZARDOUS AREA MARKING AND LIGHTING SHALL BE FURNISHED AND MAINTAINED BY THE CONTRACTOR. LIGHTING SHALL BE CHECKED FOR PROPER OPERATION AT LEAST ONCE PER DAY, PREFERABLY AT DUSK.

221. PROTECTION OF TAXIWAY SAFETY AREAS. TAXIWAY SAFETY AREAS (TSA) AND OBJECT FREE AREAS (OFA) SHALL BE PROTECTED AT ALL TIMES BY THE CONTRACTOR. NO CONSTRUCTION MAY OCCUR WITHIN THE TSA OR TOFA WHILE THE TAXIWAY IS OPEN FOR AIRCRAFT OPERATIONS. OPEN TRENCHES OR EXCAVATIONS ARE NOT PERMITTED WITHIN THE RSA OR TSA WHILE THE RUNWAY OR TAXIWAY IS OPEN.

222. OTHER LIMITATIONS ON CONSTRUCTION: THE OWNER SHALL HAVE THE AUTHORITY TO SUSPEND THE WORK WHOLLY, OR IN PART, FOR SUCH PERIOD AS NECESSARY, DUE TO CONDITIONS CONSIDERED UNFAVORABLE FOR THE PROSECUTION OF THE WORK, OR DUE TO THE FAILURE OF THE CONTRACTOR TO CARRY OUT ORDERS GIVEN OR PERFORM PROVISIONS OF THE CONTRACT. ANY VEHICLE OPERATING IN THE AOA DURING HOURS OF DARKNESS OR REDUCED VISIBILITY MUST BE EQUIPPED WITH AN AMBER FLASHING BEACON. WHEN USED DURING PERIODS OF DARKNESS, ALL BARRICADES, WARNING SIGNS, AND HAZARD MARKINGS SHALL BE SUITABLY ILLUMINATED.

GENERAL NOTES:

1. ANY TIME THE CONTRACTOR OR HIS/HER PERSONNEL ARE ON THE AIRPORT PROPERTY, THEY SHALL BE EQUIPPED WITH RADIOS CAPABLE OF RECEIVING AND BROADCASTING ON THE AIRPORT VHF FREQUENCY, 123.00. THE CONTRACTOR SHALL BE RESPONSIBLE TO OBTAIN FROM THE ENGINEER, TRAINING ON THE APPROPRIATE OPERATIONS AND PROTOCOL FOR BROADCASTING ON THE AIRPORT FREQUENCY.

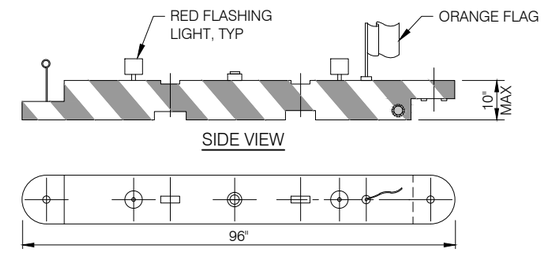

NOTES:

1. PROVIDE BARRICADE CAPABLE OF BEING FILLED WITH WATER OR SAND. IF ALTERNATE METHOD OF ANCHORING IS USED IT SHALL NOT CAUSE DAMAGE TO PAVEMENT.
2. BARRICADE TO BE CAPABLE OF BEING DEPLOYED BY ONE PERSON WHEN EMPTY.
3. LINK BARRICADES TOGETHER AS RECOMMENDED BY MANUFACTURER. PLACE BARRICADES CONTINUOUSLY ACROSS AREAS TO BE CLOSED OR AS DIRECTED BY ENGINEER.

PORTABLE PLASTIC BARRICADE DETAIL — 1/1
NTS

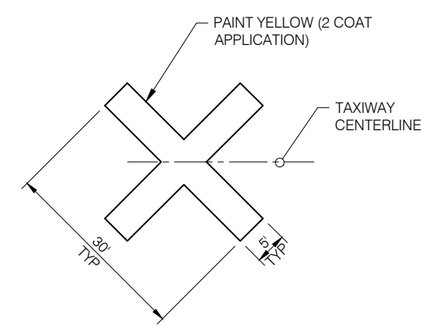

TAXIWAY CLOSURE CROSS MARKING DETAIL — 2/1
NTS

FAA PRELIMINARY SUBMITTAL
NOT FOR CONSTRUCTION
FEBRUARY 2016

PRECISION APPROACH ENGINEERING
5125 Southwest Hout Street
Corvallis, OR 97333
541•754•0043

COLUMBIA GORGE REGIONAL AIRPORT
TAXIWAY A CENTER REHABILITATION

CONSTRUCTION SAFETY AND PHASING PLAN - NOTES

SHEET 1 FEB 2016

02/15/ 16 - 2:38pm - GGoetzinger - P:\D\DAL004-TW A Imp-Center\0400CAD\DWG\Sheets\DAL004 - Phasing.dwg

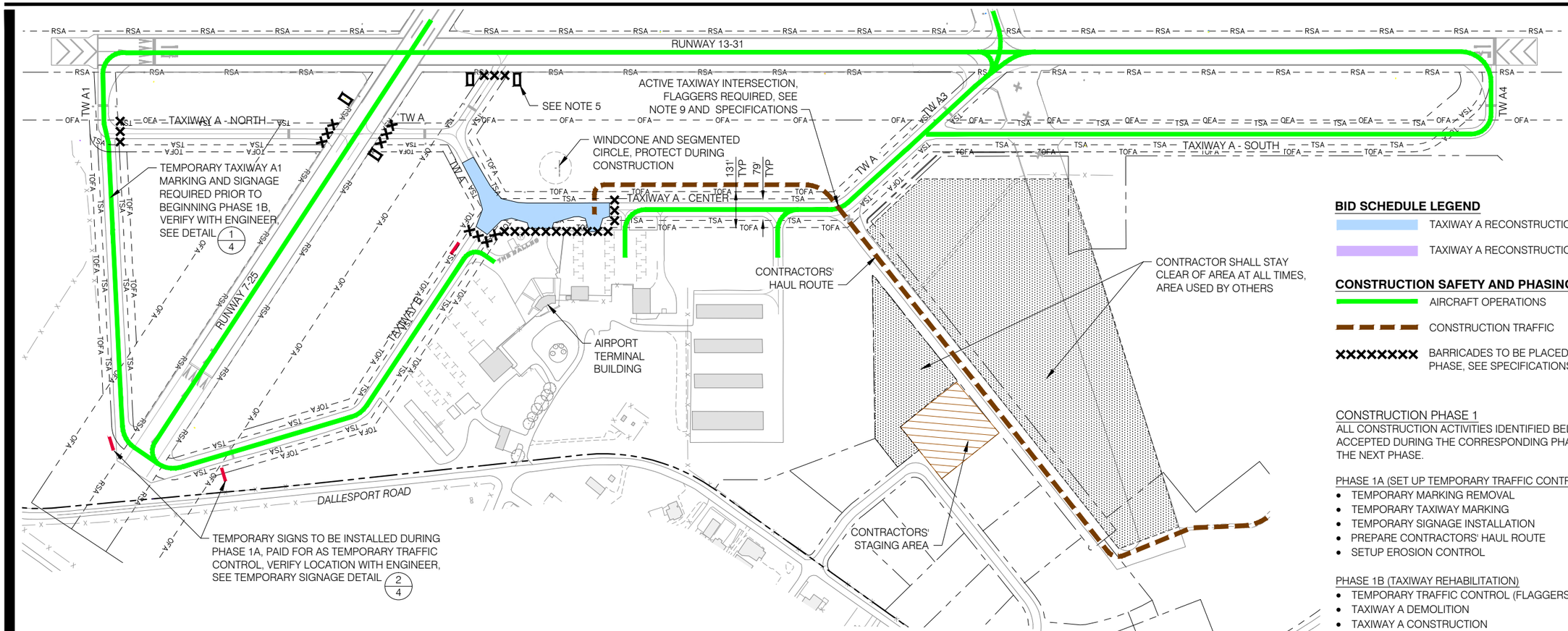

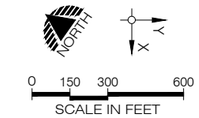

BID SCHEDULE LEGEND

- TAXIWAY A RECONSTRUCTION - PHASE 1
- TAXIWAY A RECONSTRUCTION - PHASE 2

CONSTRUCTION SAFETY AND PHASING LEGEND

- AIRCRAFT OPERATIONS
- CONSTRUCTION TRAFFIC
- XXXXXXXX BARRICADES TO BE PLACED AND MAINTAINED DURING PHASE, SEE SPECIFICATIONS, NOTES, AND DETAIL 1/1

CONSTRUCTION PHASE 1

ALL CONSTRUCTION ACTIVITIES IDENTIFIED BELOW SHALL BE COMPLETED AND ACCEPTED DURING THE CORRESPONDING PHASE PRIOR TO COMMENCING WORK IN THE NEXT PHASE.

PHASE 1A (SET UP TEMPORARY TRAFFIC CONTROL)

- TEMPORARY MARKING REMOVAL
- TEMPORARY TAXIWAY MARKING
- TEMPORARY SIGNAGE INSTALLATION
- PREPARE CONTRACTORS' HAUL ROUTE
- SETUP EROSION CONTROL

PHASE 1B (TAXIWAY REHABILITATION)

- TEMPORARY TRAFFIC CONTROL (FLAGGERS AND BARRICADES)
- TAXIWAY A DEMOLITION
- TAXIWAY A CONSTRUCTION
  - EXCAVATION, SUBBASE, BASE, ASPHALT PAVING
- DRAINAGE IMPROVEMENTS
- ELECTRICAL IMPROVEMENTS
- TAXIWAY SHOULDER CONSTRUCTION
- INSTALLATION OF RETROREFLECTIVE MARKERS AND SIGNS
- PAVEMENT MARKING (FIRST COAT)
- REVERT ALL TEMPORARY CHANGES COMPLETED IN PHASE 1A AT THE CONCLUSION OF PHASE 1 AND PRIOR TO PHASE 2

GENERAL CONSTRUCTION NOTES:

1. WORK WITHIN A RUNWAY OBJECT FREE AREA (ROFA) WILL REQUIRE CLOSURE OF THE RUNWAY UNLESS AN APPROPRIATE NOTAM (NOTICE TO AIRMEN) IS IN AFFECT. ANY ACCESS OR WORK WITHIN A RUNWAY SAFETY AREA (RSA) REQUIRES RUNWAY CLOSURE. SEE SPECIFICATIONS. RUNWAY 13-31 SHALL REMAIN OPEN AT ALL TIMES EXCEPT AS HEREIN OTHERWISE NOTED OR APPROVED BY THE OWNER.
2. IF TEMPORARY WORK IS REQUIRED PRIOR TO OPENING ANY RUNWAY OR TAXIWAY, THE CONTRACTOR SHALL BE RESPONSIBLE TO BACKFILL AND COMPACT WITH APPROVED MATERIAL ALL AREAS TO AN UNYIELDING CONDITION WITH GRADES MATCHING PAVEMENT GRADES AT THE RUNWAY OR TAXIWAY EDGE. IN ADDITION, TEMPORARY GRADES SHALL BE SMOOTH AND SHALL DRAIN AWAY FROM THE RUNWAY OR TAXIWAY. GRADES SHALL NOT EXCEED 5% AND NO VERTICAL ELEVATION CHANGES (LIPS) GREATER THAN 3 INCHES WILL BE ALLOWED. ALL TEMPORARY WORK AND MATERIALS REQUIRED TO OPEN A RUNWAY OR TAXIWAY FOR AIRCRAFT OPERATIONS SHALL BE CONSIDERED INCIDENTAL AND NO DIRECT PAYMENT SHALL BE MADE TO CONTRACTOR FOR COMPLETING TEMPORARY WORK.
3. PRIOR TO REOPENING A CLOSED RUNWAY OR TAXIWAY FOR OPERATIONS THE CONTRACTOR SHALL PROVIDE ADEQUATE TIME FOR THE ENGINEER OR OTHER AIRPORT REPRESENTATIVE TO INSPECT FOR CLEANLINESS AND CONFORMANCE TO REGULATIONS INCLUDING GRADING REQUIREMENTS OF THE RUNWAY SAFETY AREA (RSA) AND TAXIWAY SAFETY AREA (TSA). THE CONTRACTOR SHALL ALSO VERIFY THAT RUNWAY LIGHTS AND OTHER NAVAID(S) ARE OPERATING PROPERLY. THE TIME NEEDED FOR INSPECTION AND POSSIBLE NECESSARY CORRECTIVE ACTION SHALL BE INCLUDED WITHIN THE ALLOWED CLOSURE PERIOD.
4. BARRICADES, LIGHTS, AND OTHER CONSTRUCTION CONTROL DEVICES SHALL BE FURNISHED, PLACED, AND MAINTAINED BY THE CONTRACTOR AND SHALL BE PROVIDED AT VARIOUS LOCATIONS AS NECESSARY TO ADEQUATELY SEPARATE CONSTRUCTION ACTIVITIES FROM AIRCRAFT OPERATIONS AREA (AOA) OR OTHER ACTIVITIES IN THE AREA. CONSTRUCTION CONTROL(BARRICADES) SHOWN ON THE DRAWINGS ARE FOR REFERENCE AND THE NUMBER AND LOCATION MAY CHANGE TO MEET SAFETY REQUIREMENTS. VERIFY NUMBER AND LOCATION WITH ENGINEER.
5. ALL SIGNAGE, LIGHTING AND REFLECTORS DIRECTING TRAFFIC ONTO CLOSED TAXIWAYS WILL BE REQUIRED TO BE COVERED WITH AN APPROVED OPAQUE MATERIAL. VERIFY LOCATION AND QUANTITY WITH ENGINEER.
6. ANYTIME THE CONTRACTOR OR HIS/HER PERSONNEL ARE ON THE AIRPORT PROPERTY THEY SHALL BE EQUIPPED WITH RADIOS CAPABLE OF RECEIVING AND BROADCASTING ON THE AIRPORT VHF FREQUENCY, 123.0. THE CONTRACTOR SHALL OBTAIN TRAINING ON THE APPROPRIATE OPERATION AND PROTOCOL FOR BROADCASTING ON THE AIRPORT FREQUENCY.
7. CONTRACTOR SHALL SUBMIT A DETAILED PHASING PLAN TO THE OWNER FOR APPROVAL PRIOR TO THE NOTICE TO PROCEED FOR ON-SITE CONSTRUCTION WORK. THE SUBMITTED PHASING PLAN SHALL IDENTIFY DATES FOR ALL PROPOSED RUNWAY AND TAXIWAY CLOSURES, AS WELL AS DAY COUNTS AND DATES FOR COMPLETION OF ALL ELEMENTS OF WORK. ONCE THE SUBMITTED PHASING PLAN IS APPROVED BY THE OWNER NO DEVIATIONS FROM CLOSURE DATES WILL BE ALLOWED WITHOUT PRIOR OWNER APPROVAL.
8. LIQUIDATED DAMAGES ARE ASSOCIATED WITH EACH PHASE OF THE PROJECT, SEE SPECIFICATIONS.
9. IT IS ANTICIPATED THAT CONSTRUCTION TRAFFIC WILL BE REQUIRED TO CROSS AN ACTIVE TAXIWAY. DURING CONSTRUCTION OPERATIONS, THE CONTRACTOR SHALL FURNISH A FLAGGER FOR CONTROL OF CONSTRUCTION TRAFFIC. FLAGGERS ARE TO BE TRAINED BY AIRPORT OPERATIONS PERSONNEL ON AIRPORT PROCEDURES PRIOR TO ASSUMING THEIR CONTROL DUTIES. VEHICLE TRAFFIC WILL BE PERMITTED TO CROSS THE ACTIVE TAXIWAY ONLY WHEN A FLAGGER IS IN THE APPROPRIATE POSITION AND THERE ARE NO AIRCRAFT OPERATING ON THE TAXIWAY. FLAGGERS SHALL BE LOCATED AT CRITICAL LOCATIONS, AS DIRECTED BY AIRPORT OPERATIONS PERSONNEL, AND SHALL BE REQUIRED TO MAINTAIN AND MONITOR RADIO COMMUNICATIONS WITH THE LOCAL AIR TRAFFIC.
10. UNDER NO CIRCUMSTANCES IS THE CONTRACTOR OR ANY CONSTRUCTION TRAFFIC TO CROSS A RUNWAY OPEN TO AIR TRAFFIC.

CONSTRUCTION PHASING SCHEDULE

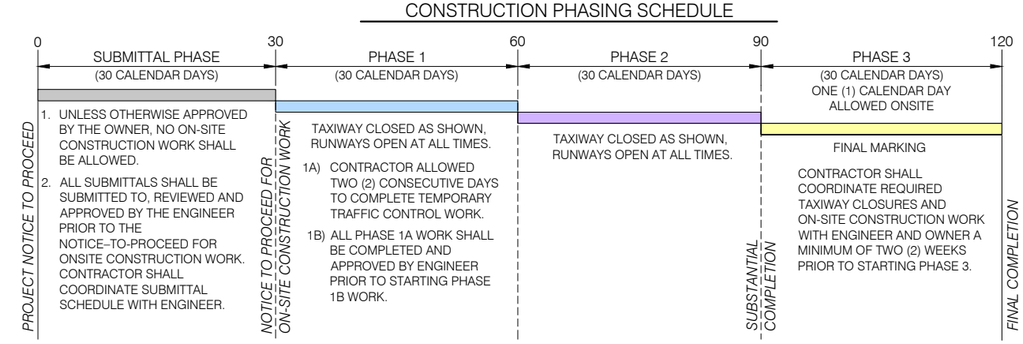

24 - HOUR EMERGENCY CONTACT:

ROLF ANDERSON (503)781-2199

NOTE:
THIS DRAWING IS INTENDED TO BE PRINTED IN COLOR. PRINTING IN BLACK AND WHITE MAY REDUCE READABILITY AND ALTER ENTITY DEFINITION OR REPRESENTATION.

FAA PRELIMINARY SUBMITTAL
NOT FOR CONSTRUCTION
FEBRUARY 2016

PRECISION APPROACH ENGINEERING
5125 Southwest Hout Street
Corvallis, OR 97333
541•754•0043

COLUMBIA GORGE REGIONAL AIRPORT
TAXIWAY A CENTER REHABILITATION

CONSTRUCTION SAFETY AND PHASING PLAN- PHASE 1

SHEET 2

FEB 2016

02/15/16 - 2:39pm - GGoetzinger - P:\D\DAL004-TW A Imp-Center\0400CAD\DWG\Sheets\DAL004 - Phasing.dwg

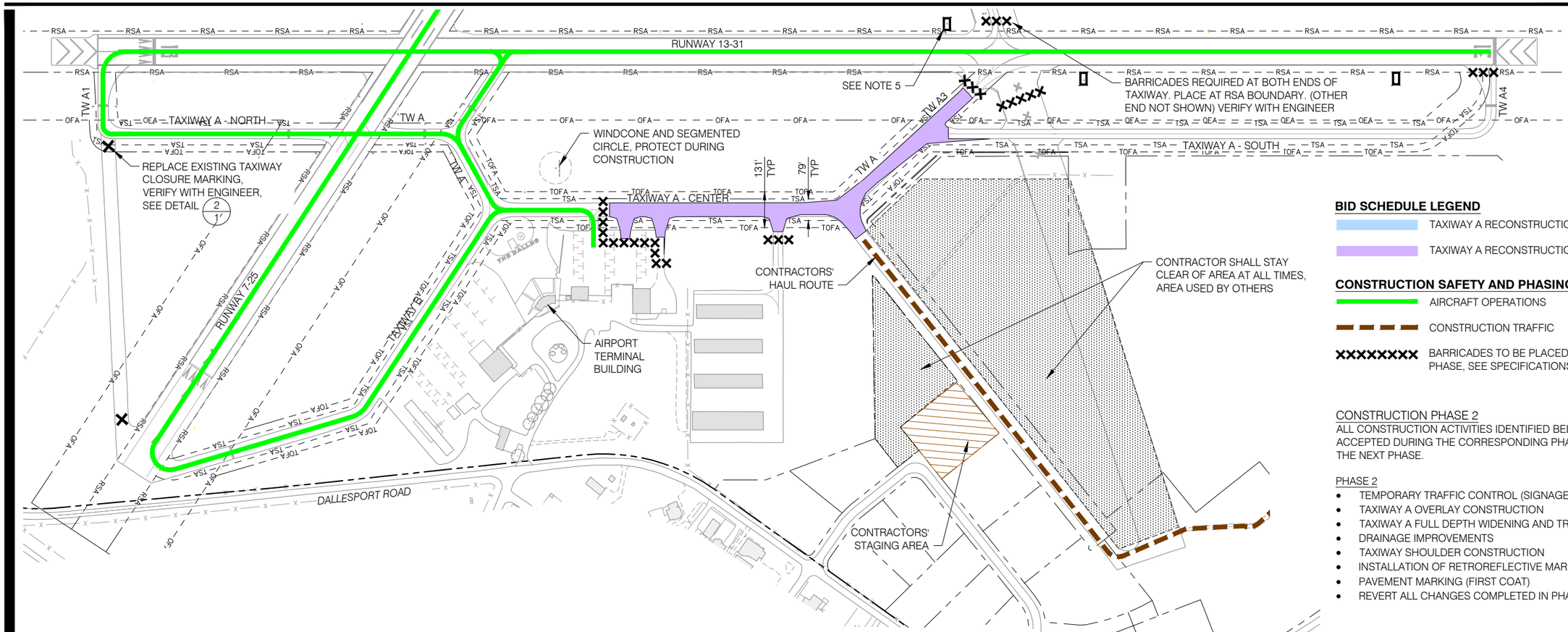

BID SCHEDULE LEGEND

- TAXIWAY A RECONSTRUCTION - PHASE 1
- TAXIWAY A RECONSTRUCTION - PHASE 2

CONSTRUCTION SAFETY AND PHASING LEGEND

- AIRCRAFT OPERATIONS
- CONSTRUCTION TRAFFIC
- XXXXXXXX BARRICADES TO BE PLACED AND MAINTAINED DURING PHASE, SEE SPECIFICATIONS, NOTES, AND DETAIL 1/1

CONSTRUCTION PHASE 2

ALL CONSTRUCTION ACTIVITIES IDENTIFIED BELOW SHALL BE COMPLETED AND ACCEPTED DURING THE CORRESPONDING PHASE PRIOR TO COMMENCING WORK IN THE NEXT PHASE.

PHASE 2

- TEMPORARY TRAFFIC CONTROL (SIGNAGE AND BARRICADES)
- TAXIWAY A OVERLAY CONSTRUCTION
- TAXIWAY A FULL DEPTH WIDENING AND TRANSITIONS
- DRAINAGE IMPROVEMENTS
- TAXIWAY SHOULDER CONSTRUCTION
- INSTALLATION OF RETROREFLECTIVE MARKERS AND SIGNS
- PAVEMENT MARKING (FIRST COAT)
- REVERT ALL CHANGES COMPLETED IN PHASE 1A, SITE CLEAN UP

GENERAL CONSTRUCTION NOTES:

1. WORK WITHIN A RUNWAY OBJECT FREE AREA (ROFA) WILL REQUIRE CLOSURE OF THE RUNWAY UNLESS AN APPROPRIATE NOTAM (NOTICE TO AIRMEN) IS IN AFFECT. ANY ACCESS OR WORK WITHIN A RUNWAY SAFETY AREA (RSA) REQUIRES RUNWAY CLOSURE. SEE SPECIFICATIONS. RUNWAY 13-31 SHALL REMAIN OPEN AT ALL TIMES EXCEPT AS HEREIN OTHERWISE NOTED OR APPROVED BY THE OWNER.
2. IF TEMPORARY WORK IS REQUIRED PRIOR TO OPENING ANY RUNWAY OR TAXIWAY, THE CONTRACTOR SHALL BE RESPONSIBLE TO BACKFILL AND COMPACT WITH APPROVED MATERIAL ALL AREAS TO AN UNYIELDING CONDITION WITH GRADES MATCHING PAVEMENT GRADES AT THE RUNWAY OR TAXIWAY EDGE. IN ADDITION, TEMPORARY GRADES SHALL BE SMOOTH AND SHALL DRAIN AWAY FROM THE RUNWAY OR TAXIWAY. GRADES SHALL NOT EXCEED 5% AND NO VERTICAL ELEVATION CHANGES (LIPS) GREATER THAN 3 INCHES WILL BE ALLOWED. ALL TEMPORARY WORK AND MATERIALS REQUIRED TO OPEN A RUNWAY OR TAXIWAY FOR AIRCRAFT OPERATIONS SHALL BE CONSIDERED INCIDENTAL AND NO DIRECT PAYMENT SHALL BE MADE TO CONTRACTOR FOR COMPLETING TEMPORARY WORK.
3. PRIOR TO REOPENING A CLOSED RUNWAY OR TAXIWAY FOR OPERATIONS THE CONTRACTOR SHALL PROVIDE ADEQUATE TIME FOR THE ENGINEER OR OTHER AIRPORT REPRESENTATIVE TO INSPECT FOR CLEANLINESS AND CONFORMANCE TO REGULATIONS INCLUDING GRADING REQUIREMENTS OF THE RUNWAY SAFETY AREA (RSA) AND TAXIWAY SAFETY AREA (TSA). THE CONTRACTOR SHALL ALSO VERIFY THAT RUNWAY LIGHTS AND OTHER NAVAID(S) ARE OPERATING PROPERLY. THE TIME NEEDED FOR INSPECTION AND POSSIBLE NECESSARY CORRECTIVE ACTION SHALL BE INCLUDED WITHIN THE ALLOWED CLOSURE PERIOD.
4. BARRICADES, LIGHTS, AND OTHER CONSTRUCTION CONTROL DEVICES SHALL BE FURNISHED, PLACED, AND MAINTAINED BY THE CONTRACTOR AND SHALL BE PROVIDED AT VARIOUS LOCATIONS AS NECESSARY TO ADEQUATELY SEPARATE CONSTRUCTION ACTIVITIES FROM AIRCRAFT OPERATIONS AREA (AOA) OR OTHER ACTIVITIES IN THE AREA. CONSTRUCTION CONTROL(BARRICADES) SHOWN ON THE DRAWINGS ARE FOR REFERENCE AND THE NUMBER AND LOCATION MAY CHANGE TO MEET SAFETY REQUIREMENTS. VERIFY NUMBER AND LOCATION WITH ENGINEER.
5. ALL SIGNAGE, LIGHTING AND REFLECTORS DIRECTING TRAFFIC ONTO CLOSED TAXIWAYS WILL BE REQUIRED TO BE COVERED WITH AN APPROVED OPAQUE MATERIAL. VERIFY LOCATION AND QUANTITY WITH ENGINEER.
6. ANYTIME THE CONTRACTOR OR HIS/HER PERSONNEL ARE ON THE AIRPORT PROPERTY THEY SHALL BE EQUIPPED WITH RADIOS CAPABLE OF RECEIVING AND BROADCASTING ON THE AIRPORT VHF FREQUENCY, 123.0. THE CONTRACTOR SHALL OBTAIN TRAINING ON THE APPROPRIATE OPERATION AND PROTOCOL FOR BROADCASTING ON THE AIRPORT FREQUENCY.
7. CONTRACTOR SHALL SUBMIT A DETAILED PHASING PLAN TO THE OWNER FOR APPROVAL PRIOR TO THE NOTICE TO PROCEED FOR ON-SITE CONSTRUCTION WORK. THE SUBMITTED PHASING PLAN SHALL IDENTIFY DATES FOR ALL PROPOSED RUNWAY AND TAXIWAY CLOSURES, AS WELL AS DAY COUNTS AND DATES FOR COMPLETION OF ALL ELEMENTS OF WORK. ONCE THE SUBMITTED PHASING PLAN IS APPROVED BY THE OWNER NO DEVIATIONS FROM CLOSURE DATES WILL BE ALLOWED WITHOUT PRIOR OWNER APPROVAL.
8. LIQUIDATED DAMAGES ARE ASSOCIATED WITH EACH PHASE OF THE PROJECT, SEE SPECIFICATIONS.

CONSTRUCTION PHASING SCHEDULE

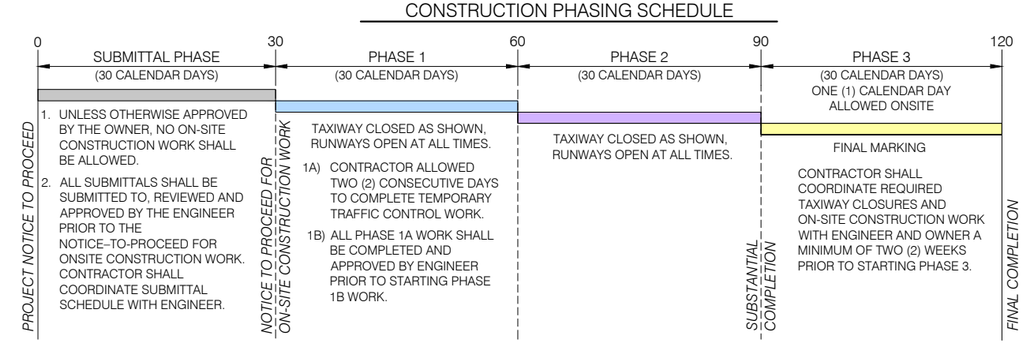

24 - HOUR EMERGENCY CONTACT:

ROLF ANDERSON (503)781-2199

NOTE:
THIS DRAWING IS INTENDED TO BE PRINTED IN COLOR. PRINTING IN BLACK AND WHITE MAY REDUCE READABILITY AND ALTER ENTITY DEFINITION OR REPRESENTATION.

FAA PRELIMINARY SUBMITTAL
NOT FOR CONSTRUCTION
FEBRUARY 2016

PRECISION APPROACH ENGINEERING
5125 Southwest Hout Street
Corvallis, OR 97333
541•754•0043

COLUMBIA GORGE REGIONAL AIRPORT
TAXIWAY A CENTER REHABILITATION

CONSTRUCTION SAFETY AND PHASING PLAN - PHASE 2

SHEET 3 FEB 2016

02/15/ 16 - 2:39pm - GGoetzinger - P:\D\DAL004-TW A Imp-Center\0400CAD\DWG\Sheets\DAL004 - Phasing.dwg

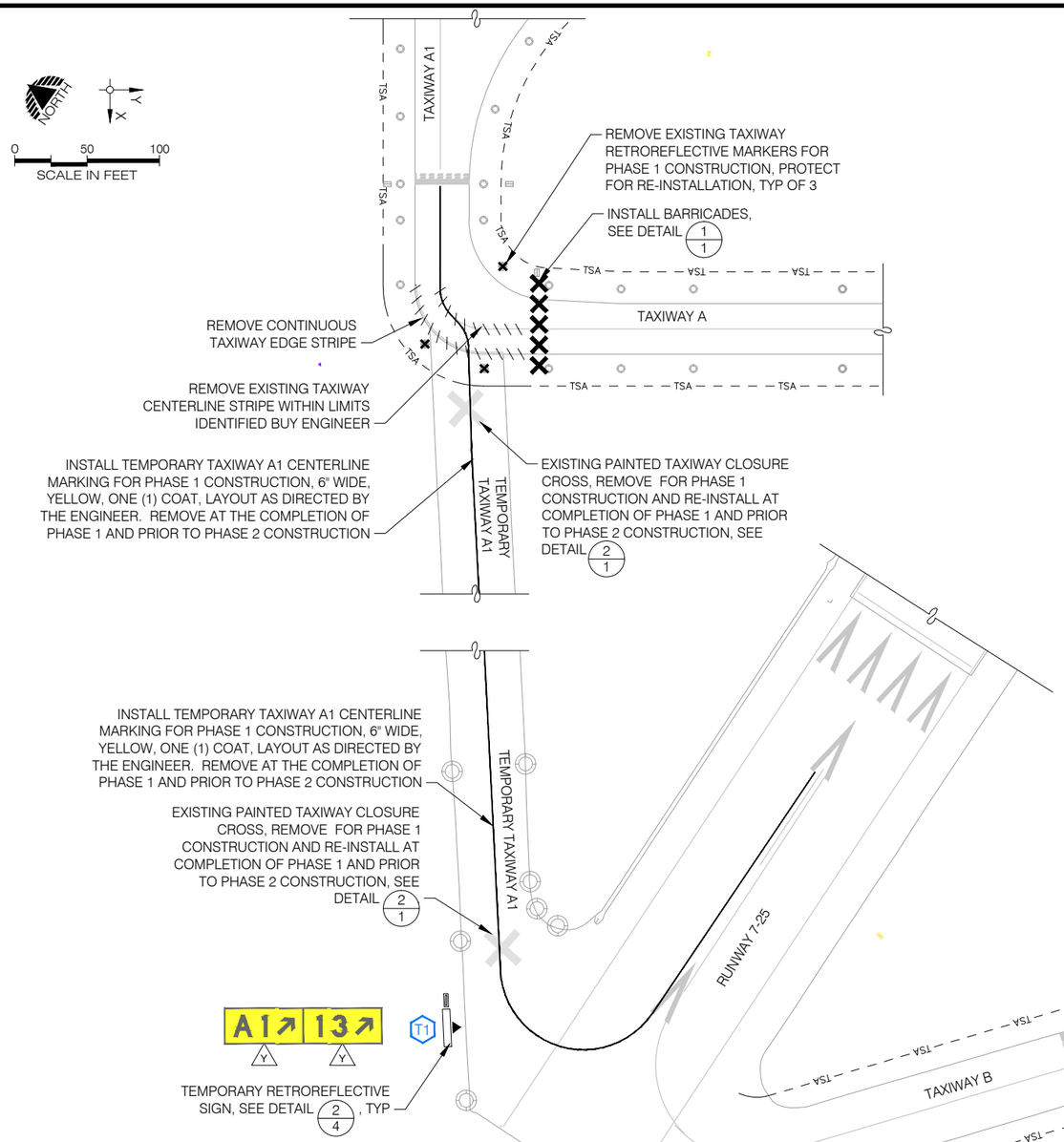

NOTES:

1. AFTER REMOVAL OF ALL TEMPORARY PAVEMENT MARKING CONTRACTOR SHALL SEAL ALL SCARRED PAVEMENT AREAS WITH APPROVED METHOD AND MATERIALS. ALL WORK AND MATERIALS REQUIRED SHALL BE CONSIDERED INCIDENTAL TO TEMPORARY TRAFFIC CONTROL BID ITEM.

TEMPORARY TAXIWAY A1 MARKING AND SIGNAGE DETAIL 1/4

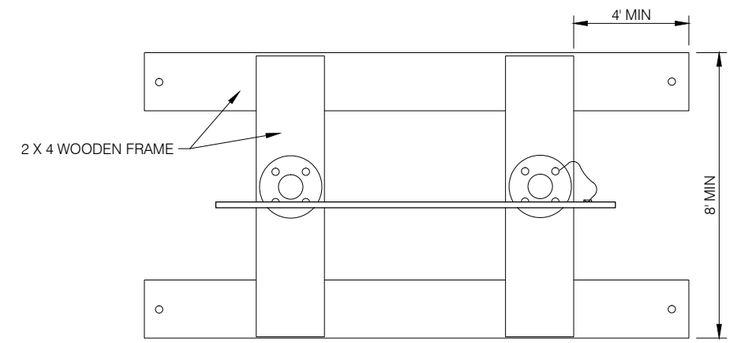

PLAN

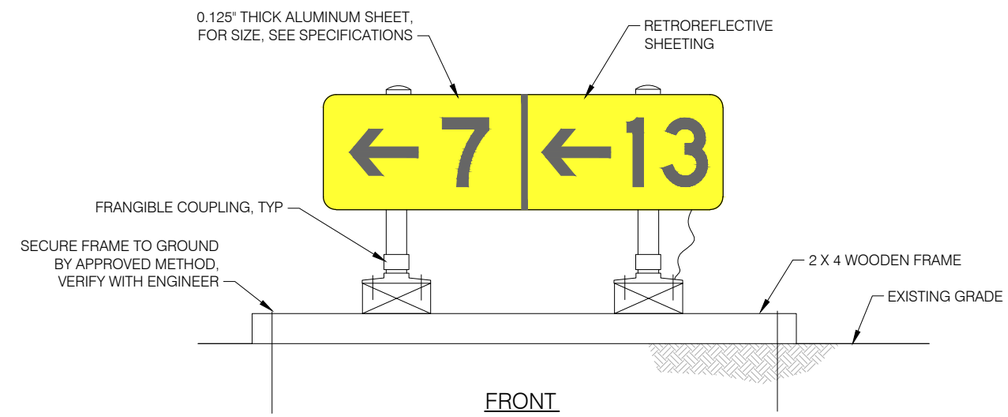

FRONT

TEMPORARY RETROREFLECTIVE SIGN DETAIL 2/4

NTS

FAA PRELIMINARY SUBMITTAL
NOT FOR CONSTRUCTION
FEBRUARY 2016

PRECISION APPROACH ENGINEERING
4575 SW Research Way, Suite•250
Corvallis, OR 97333
541•754•0043

COLUMBIA GORGE REGIONAL AIRPORT
TAXIWAY A CENTER REHABILITATION

CONSTRUCTION SAFETY AND PHASING PLAN - TEMPORARY SIGNAGE AND MARKING DETAILS

SHEET 4 FEB 2016

02/15/ 16 - 2:40pm - GGoetzinger - P:\D\DAL004-TW A Imp-Center\0400CAD\DWG\Sheets\DAL004 - Signs.dwg